2010 - 0147

MEMORANDUM OF UNDERSTANDING

BETWEEN

THE SECRETARY OF DEFENSE
ON BEHALF OF THE DEPARTMENT OF DEFENSE
OF THE UNITED STATES OF AMERICA

AND

THE MINISTER OF DEFENCE
OF THE KINGDOM OF THE NETHERLANDS

CONCERNING

OPERATIONS AND SUPPORT OF THE

ADVANCED EXTREMELY HIGH FREQUENCY

MILITARY SATELLITE COMMUNICATIONS SYSTEM

TABLE OF CONTENTS

INTRODUCTION		3
ARTICLE I	DEFINITIONS AND ACROYNMS	4
ARTICLE II	OBJECTIVES	11
ARTICLE III	SCOPE OF WORK	12
ARTICLE IV	MANAGEMENT (ORGANIZATION AND RESPONSIBILITIES)	13
ARTICLE V	FINANCIAL ARRANGEMENTS	17
ARTICLE VI	CONTRACTING PROVISIONS	19
ARTICLE VII	PROJECT EQUIPMENT	21
ARTICLE VIII	DISCLOSURE AND USE OF PROJECT INFORMATION	22
ARTICLE IX	CONTROLLED UNCLASSIFIED INFORMATION	28
ARTICLE X	VISITS TO ESTABLISHMENTS	29
ARTICLE XI	SECURITY	30
ARTICLE XII	THIRD PARTY SALES AND TRANSFERS	33
ARTICLE XIII	LIABILITY AND CLAIMS	34
ARTICLE XIV	CUSTOMS DUTIES, TAXES, AND SIMILAR CHARGES	35
ARTICLE XV	SETTLEMENT OF DISPUTES	35
ARTICLE XVI	GENERAL PROVISIONS	36
ANNEX A	OPERATIONS AND SUPPORT OF THE ADVANCED EXTREMELY HIGH-FREQUENCY (AEHF) MILITARY SATELLITE COMMUNICATIONS (MILSATCOM) SYSTEM PROJECT	
ANNEX B	EXCHANGE OF COOPERATIVE PROJECT PERSONNEL	

INTRODUCTION

The Department of Defense (DoD) of the United States of America and the Minister of Defence of the Kingdom of the Netherlands (MOD), hereinafter referred to as the "Parties":

Having a common interest in defense;

Recognizing the benefits to be obtained from standardization, rationalization, and interoperability of military equipment;

Seeking to make the best use of their respective operations and support capabilities, eliminate unnecessary duplication of work and obtain the most efficient and cost-effective results;

Recognizing the need to develop emerging technologies collectively to field and maintain technologically superior military satellite communications (MILSATCOM) systems;

Having a mutual need for increased capacity on the Advanced Extremely High-Frequency (AEHF) MILSATCOM System to satisfy common operational requirements;

Recognizing the ongoing cooperation under the Memorandum of Understanding (MOU) between the Department of Defense of the United States of America and Minister of Defence of the Kingdom of the Netherlands Concerning Development, Documentation, Production and Initial Fielding of Advanced Extremely High Frequency (AEHF) Military Satellite Communications (MILSATCOM), which entered into effect November 8, 2002 (hereinafter referred to as the "2002 MOU");

Have agreed as follows:

ARTICLE I

DEFINITIONS AND ACRONYMS

The Parties have agreed upon the following definitions and acronyms for terms used in this MOU:

DEFINITIONS

Advanced Extremely High Frequency (AEHF) Communications Security (COMSEC)/ Transmission Security (TRANSEC) System (ACTS)	Suite of cryptographic equipment being developed by the U.S. National Security Agency (NSA) to protect the AEHF MILSATCOM System.
AEHF MILSATCOM Operations and Support Project (Project)	The cooperative effort (hereinafter referred to as the "Project") by the DoD and MOD to operate and support their respective portions of the AEHF Program to meet DoD and MOD national needs. This effort is a subset of the operations and support phase of the AEHF Program.
AEHF Program	A DoD MILSATCOM program to develop, field, operate, and support the AEHF Space and Control Segments, which provide highly protected communications for strategic and tactical warfighters. These communications are characterized by jam-resistance, low probability of detection and intercept, hardening, and anti-scintillation.
AEHF MILSATCOM System	An advanced extremely high frequency satellite communications system, which includes a Space Segment, a Control Segment, and a Terminal Segment.
Allocation	The process of assigning Resources contained in an Apportionment. Allocation authority is vested in the DoD or MOD user that has received the apportioned Resources.
Antenna Controllers (AC)	Terminals responsible for the management of steerable antenna beams.
Apportionment	The AEHF resources provided to Combatant Commands and international partners to plan, manage, and operate for the purposes of fulfilling their mission requirements.

Assured Access	The certainty that the agreed upon amounts of AEHF MILSATCOM Resources are immediately available and accessible for the user when and where needed in accordance with the 2002 MOU and Annex A (AEHF System Description and Capacity Sharing Terms and Conditions) to that MOU. Assured Access does not include loss of communications due to jamming, weather, or atmospheric effects.
Baseline Resources	AEHF system Resources the MOD receives in accordance with Annex A (AEHF Project System Description and Capacity Sharing Terms and Conditions) to the 2002 MOU and Annex A (Operations and Support of AEHF MILSATCOM System Project) to this MOU.
Classified Information	Official Information that requires protection in the interests of national security and is so designated by the application of a security classification. This Information may be in oral, visual, magnetic, or documentary form or in the form of equipment or technology.
Communications Controllers (CC)	Terminals responsible for the management of communication services and associated communication Resources.
Communications Security (COMSEC)	Measures and controls taken to deny unauthorized persons Information from, or access to, user communications.
Contract	Any mutually binding legal relationship under national laws which obligates a Contractor to furnish supplies or services, and obligates one or both of the Parties to pay for them.
Contracting	The obtaining of supplies or services by Contract from sources outside the governmental organizations of the Parties. Contracting includes a description (but not determination) of supplies and services required solicitation and selection of sources, preparation and award of Contracts, and all phases of Contract administration.
Contracting Agency	The entity within the governmental organization of a Party that has authority to enter into, administer, and terminate contracts.
Contracting Officer	A person representing a Contracting Agency of a Party who has the authority to enter into, administer, and terminate contracts.
Contractor	Any entity awarded a Contract under a Project by a Party's Contracting Agency.
Contractor Support Personnel	Persons specifically identified as providing administrative, managerial, scientific, or technical support services to a Party under a support

	Contract that prohibits those persons from using Information received under the Contract for any purpose other than those authorized under this MOU.
Control Segment	The portion of AEHF MILSATCOM System responsible for the overall control of the system, including satellite operations, payload health, total system monitoring, and Apportionment planning support and execution. It includes equipment used to control satellite bus and payload on AEHF satellites as well as the tools required to plan and manage communications Resources.
Controlled Unclassified Information	Unclassified Information to which access or distribution limitations have been applied in accordance with applicable national laws or regulations, including Information that has been declassified but remains controlled.
Cooperative Project Personnel (CPP)	Military members or civilian employees of a Party, who are assigned to work on the Project in a country other than their own and perform managerial, engineering, technical, administrative, Contracting, logistics, financial, planning, or other functions in furtherance of the Project.
Defense Purposes	Manufacture or other use in any part of the world by or for the armed forces of either Party.
Designated Security Authority (DSA)	The security office approved by national authorities to be responsible for the security aspects of this MOU.
Fence	A Fence is a subset of the AEHF satellite communications Resources identified by a Fence identification (Fence ID). The AEHF apportioned Resources shall take the form of a Fence.
Fence Controllers (FC)	Terminals responsible for monitoring resource utilization within its fence to ensure that no resource abuse takes place.
Fence Privileged Terminal	Privileged terminals responsible for the management of Fences. Fence Privileged Terminals have the power to affect the use of system Resources within the primary Fence (Fence ID) associated with a given Apportionment and all sub-Fences and sub-sub-Fences derived from it.
Financial Costs	Project costs met with monetary contributions.
Financial Cost Ceiling	The maximum amount to which the cost target may move without the prior written approval of the Parties.
Financial Cost Target	The accepted planning figure of the total cost of the Project.
Host Party	The DoD or MOD to which the CPP has been assigned by the Parent

	Party.
Information	Knowledge that can be communicated by any means, regardless of form or type, including, but not limited to, that of a scientific, technical, business, or financial nature, and also including photographs, reports, manuals, threat data, experimental data, test data, computer software, designs, specifications, processes, techniques, inventions, drawings, technical writings, sound recordings, pictorial representations, and other graphical presentations, whether in magnetic tape, computer memory, or any other form, and whether or not subject to intellectual property rights.
International Partner (IP)	A U.S. ally that has committed, via an MOU, to the joint development of a portion of the AEHF Program with the United States for the satisfaction of the International Partner's (IP's) national MILSATCOM requirements. Currently, these include the Netherlands, Canada, and the United Kingdom.
Key Management Plan	Document describing the management of all keys used by a system throughout its lifetime.
Non-financial Costs	Project costs met with non-monetary contributions.
Operations and Support (O&S)	All personnel, equipment, supplies, software, services, including Contractor support associated with operating, modifying, maintaining, supplying, training, and supporting a system.
Over-the-Air Rekeying (OTAR)	Changing traffic encryption key or transmission security key in remote crypto-equipment by sending new key directly to the remote crypto-equipment over the communications path it secures.
Parent Party	The DoD or MOD from which the CPP was assigned.
Party	A signatory to this MOU represented by its military and civilian personnel. Contractors and Contractor Support Personnel shall not be representatives of a Party under this MOU.
Patent	Grant by any Government or a regional office acting for more than one Government of the right to exclude others from making, using, importing, selling, or offering to sell an invention. The term refers to any and all patents including, but not limited to, patents of implementation, improvement or addition, petty patents, utility models, appearance design patents, registered designs, and inventor certificates or like statutory protection, as well as divisions, reissues, continuations, renewals, and extensions of any of these.

Precedence	A service resource attribute that the AEHF onboard resource controller uses to determine the relative importance of a request for resource assignment.
Priority	A terminal attribute that identifies to the AEHF system what system Resources/services a terminal may access.
Privilege	Refers to an AEHF terminal's ability to perform functions such as network or point-to-point call tear down, Communications Controller ID change, antenna controller ID change, and resource monitoring queries. A satellite payload recognizes a privileged terminal by its terminal ID.
Project Background Information	Information not generated in the performance of the Project.
Project Equipment	Any material, equipment, end item, subsystem, component, special tooling or test equipment jointly acquired or provided for use in the Project.
Project Foreground Information	Information generated in the performance of the Project.
Project Information	Any Information provided to, generated in, or used in the Project.
Project Invention	Any invention in any field of technology, provided it is new, involves an inventive step, is capable of industrial application, and is formulated or made, either conceived or "first actually reduced to practice" in the course of work performed under a Project. The term "first actually reduced to practice" means the first demonstration, sufficient to establish to one skilled in the art to which the invention pertains, of the operability of an invention for its intended purpose and in its intended environment.
Project Manager for Development (PMDEV)	Individual from the DoD acquisition community responsible for development, production, and fielding of the Project.
Project Manager for Support (PMSUP)	Individual from the DoD support community responsible for life-cycle support and assigned to manage the sustainment aspects of the Project after transition from development to O&S.
Project Purposes	Use by or for the Parties to meet the objectives of this Memorandum of Understanding.
Project Team Leader	Individual assigned to lead the MOD AEHF MILSATCOM project.

Prospective Contractor	Any entity that seeks to enter into a Contract to be awarded by a Party's Contracting Agency and that, in the case of a solicitation involving the release of export-controlled Information, is eligible to receive such Information.
Resources	Uplink channels, downlink slots (hops), crosslink slots, coverage beams, service IDs, terminal IDs, Fence IDs, and a number of privileged terminals.
SATCOM Operational Manager (SOM)	The DoD organization responsible for the management and control of MILSATCOM Resources to ensure access for Combatant Commands and other users, including in the Netherlands.
SATCOM System Expert (SSE)	The DoD organization assigned to provide technical and engineering support to a SATCOM system.
Space Segment	Consists of the AEHF spacecraft and all related components.
Terminal Segment	The portion of AEHF MILSATCOM System consisting of all terminals that can access the AEHF MILSATCOM System. The Terminal Segment includes terminals hosted on aircraft, ships and submarine platforms or installed at fixed sites and in ground mobile and transportable configurations, and packaged as man-portable units.
Then-Year Dollars	Then-Year Dollars represent amounts in U.S. dollars that shall be paid for Resources in the actual years in which payments shall be made. A Then-Year Dollar contains implicit adjustment for variation in the purchasing power of a dollar over time.
Third Party	A government other than the Government of a Party and any person or other entity whose Government is not the Government of a Party.
Transmission Security (TRANSEC)	Measures and controls taken to deny unauthorized persons information derived from telecommunication signals and ensure the authenticity of such telecommunications.

ACRONYMS

AC	Antenna Controllers
ACTS	AEHF COMSEC/TRANSEC System
AEHF	Advanced Extremely High Frequency
AFSPC	Air Force Space Command
CC	Communications Controller
CG	Classification Guide
CNIP	Coalition Network Interoperability Plan

COMSEC	Communications Security
CONOPS	Concept of Operations
CONSUP	Concept of Support
CPP	Cooperative Project Personnel
DoD	Department of Defense
DPO	DoD/MOD Project Office
DSA	Designated Security Authorities
EHF	Extremely High Frequency
EU	European Union
FC	Fence Controller
FMPD	Financial Management and Procedures Document
FY	U.S. Fiscal Year
GSSC	Global SATCOM Support Center
ID	Identification
IP	International Partner
ITAR	International Traffic in Arms Regulations
JCSC	Joint Communications Satellite Center
LAKMS	Local AEHF Key Management Station
MILSATCOM	Military Satellite Communications
MOD	Minister of Defence
MOU	Memorandum of Understanding
MPE	Mission Planning Element
NCSA	National Communication Security Agency
NSA	National Security Agency
O&S	Operations and Support
OTAR	Over-the-Air Rekeying
OSD	Office of the Secretary of Defense
OSPO	Operations and Support Project Office
OSSC	Operations and Support Steering Committee
PMDEV	Project Manager for Development
PMSUP	Project Manager for Support
PSI	Project Security Instruction
RSSC	Regional SATCOM Support Center
SATCOM	Satellite Communications
SC	Steering Committee
SIPRNET	Secret Internet Protocol Router Network
SOC	Satellite Operations Center
SOFA	Status of Forces Agreement
SOM	SATCOM Operational Manager
SSE	SATCOM System Expert
TRANSEC	Transmission Security
U.S.	United States
USSTRATCOM	United States Strategic Command

ARTICLE II

OBJECTIVES

2.1. The objectives of this MOU are:

2.1.1. To operate, maintain, and cooperate jointly on portions of the O&S of the AEHF MILSATCOM Program, in accordance with the provisions of this MOU and Annex A (Operations and Support of the AEHF MILSATCOM System Project) to this MOU.

2.1.2. To establish technical and operational interoperability requirements and determine the means to meet these requirements during O&S of the AEHF Program in accordance with Annex A (Operations and Support of the AEHF MILSATCOM System Project) to this MOU, and the mutual defense objectives of the United States and the Netherlands.

2.1.3. To determine the flexibility and constraints associated with the Parties' cooperation on portions of the O&S of the AEHF MILSATCOM Program, and to document them in concepts of operation, operating instructions, and operating procedures.

2.1.4. To set the basis for long-term cooperation for the AEHF MILSATCOM System that is mutually beneficial for the Parties.

2.2. This MOU does not preclude the Parties from entering into any other bilateral or multilateral arrangements regarding the AEHF MILSATCOM System.

2.3. This MOU supplements and supports the 2002 MOU, and it achieves the objective in the 2002 MOU of developing a follow-on MOU for cooperation on the O&S of the AEHF MILSATCOM System.

ARTICLE III

SCOPE OF WORK

3.1. This MOU shall be implemented in accordance with the O&S provisions of the Annexes to this MOU. The Parties may enter into other arrangements within the scope of this MOU, as necessary. Annex A (Operations and Support of the AEHF MILSATCOM System Project) to this MOU sets out the details for AEHF O&S cooperation. The overall work to be undertaken under this MOU, as detailed in the Annexes to this MOU, includes, but is not limited to, the following:

3.1.1. Cooperation on the operations of the AEHF MILSATCOM System, including the communications planning, network/resource control, and Terminal Segment;

3.1.2. Maintaining the technical and operational requirements and solutions that enable the DoD and MOD users of the AEHF MILSATCOM System to be interoperable;

3.1.3. Cooperation on the portions of the support of the AEHF MILSATCOM System that are cooperatively developed and fielded, for the operational life of the AEHF MILSATCOM System; and

3.1.4. Under DoD lead, with MOD support and collaboration, develop, document, procure, and field modifications and enhancements to the AEHF MILSATCOM System to meet national and coalition requirements.

3.2. In the event that portions of the AEHF MILSATCOM System Space Segment are completed with a follow-on capability instead of the AEHF satellites, the Baseline Resources that MoD receives in accordance with Annex A (AEHF Project System Description and Capacity Sharing Terms and Conditions) to the 2002 MOU shall be provided through a combination of the original AEHF satellites and a subsequent AEHF-compatible satellite systems.

3.4. If, as designed, the AEHF MILSATCOM System operational life extends beyond the current Fiscal Year (FY) 2024 budget projection, the Parties' financial responsibilities as detailed in Article V (Financial Arrangements) of this MOU shall be extended, but only upon the mutual written agreement of the Parties. This shall cover the associated extension of services provided under this MOU.

ARTICLE IV

MANAGEMENT (ORGANIZATION AND RESPONSIBILITIES)

4.1. In accordance with the 2002 MOU, this Project is directed and administered on behalf of the Parties by an organization consisting of a Steering Committee (SC) and a DoD/MOD Project Office (DPO) headed by a Project Manager for Development (PMDEV). After development and fielding, the Project shall be directed and administered on behalf of the Parties by an organization consisting of an O&S Steering Committee (OSSC) and an O&S Project Office (OSPO) headed by a Project Manager for Support (PMSUP). Except as set out in paragraph 4.5. of this Article, it is envisioned that OSPO members shall not be co-located, but they shall execute their duties from their respective host nation organizations.

4.1.1. The Operational Transition Group shall develop a plan outlining the sequence of events that shall transition the Project from development, documentation, production and initial fielding established by the 2002 MOU to the Project established by this MOU. Following this transition, the SC shall transfer its duties and responsibilities to OSSC.

4.1.1.1. The MOD shall participate in any appropriate operational working groups, as necessary.

4.1.2. The Parties may decide to hold the OSSC meetings in partnership with the other IPs in accordance with the OSSC Charter to be approved by the Parties and the other IPs. The Parties shall ensure that the bilateral nature of this MOU is safeguarded within the composition and terms of the OSSC Charter by holding bilateral sessions of the OSSC as needed.

4.1.3. The OSSC shall consist of a representative designated by each Party. The OSSC shall meet at least annually with additional meetings held at the request of either representative. The representative of the Party hosting the meeting shall chair that meeting of the OSSC.

4.1.4. Decisions of the OSSC shall be made unanimously. In the event that the OSSC is unable to reach a timely decision on an issue, each OSSC representative shall refer the issue to its higher authority for resolution. The approved Project shall continue to be implemented without interruption under the direction of the AEHF PMSUP while the issue is being considered by the appropriate higher authorities.

4.2. The OSSC shall be responsible for:

4.2.1. Exercising executive-level oversight of the Project;

4.2.2. Reviewing progress towards accomplishing the tasks prescribed in Article II (Objectives) and Article III (Scope of Work) of this MOU;

4.2.3. Approving the O&S Financial Management and Procedures Document (FMPD), and revisions thereto, in accordance with Article XVI (General Provisions) of this MOU, and conducting revalidations every five years of the mid and long-term O&S Financial Cost Target for the Project in accordance with procedures established in the FMPD.

4.2.4. Recommending amendments to this MOU, including additional Annexes within the scope of this MOU, in accordance with Article XVI (General Provisions) of this MOU.

4.2.5. Resolving operational issues brought forth by the Parties.

4.2.6. Approving amendments to Annexes to this MOU, in accordance with Article XVI (General Provisions) of this MOU.

4.2.7. Approving arrangements within the scope of this MOU, in accordance with Article XVI (General Provisions) of this MOU.

4.2.8. Discussing and employing their best efforts to resolve through the relevant export control authorities any export control issues raised by the Parties.

4.2.9. Monitoring Third Party sales and transfers authorized in accordance with Article XII (Third Party Sales and Transfers) of this MOU.

4.2.10. Approving modifications to the Project Security Instruction (PSI) and a Classification Guide (CG) for the Project.

4.3. As the DoD SATCOM Operational Manager (SOM), U.S. Strategic Command (USSTRATCOM) shall be responsible for:

4.3.1. Managing day-to-day operations of the AEHF MILSATCOM System.

4.3.2. Maintaining a direct liaison with the U.S. Military Departments, Joint Staff, Defense Information Systems Agency, MOD, Office of the Secretary of Defense (OSD), other IPs, and users of SATCOM systems to support DoD SATCOM architecture development, and integrating SATCOM into the defense information infrastructure/defense information systems network.

4.3.3. Ensuring MOD Baseline Resources that MOD receives in accordance with Annex A (AEHF Project System Description and Capacity Sharing Terms and Conditions) to the 2002 MOU are provided over the life of the AEHF MILSATCOM System.

4.3.4. Executing policy and directions as they relate to the AEHF MILSATCOM System

4.3.5. Coordinating technical aspects of the AEHF MILSATCOM System with the applicable SATCOM Systems Expert (SSE).

4.3.6. Coordinating day-to-day operations with DoD and MOD operational elements and other IPs.

4.3.7. Preparing periodic operational status reports for submission to the OSSC.

4.3.8. Referring to the OSSC issues that cannot be resolved by the SOM.

4.4. As the DoD lead for AEHF development and support, U.S. Air Force Space Command (AFSPC) shall designate the PMDEV and the PMSUP.

4.4.1. PMDEV shall:

4.4.1.1. Execute the financial aspects of the Project in accordance with the provisions of Article V (Financial Arrangements) of this MOU.

4.4.1.2. Prepare the O&S FMPD that establishes the detailed financial management procedures under which the Project shall operate. These procedures must be in accordance with the national accounting and audit requirements of the Parties.

4.4.1.3. Maintain the PSI and CG until the transition referenced in paragraph 4.1. occurs.

4.4.1.4. Monitor export control arrangements required to implement this MOU and, if applicable, discuss and resolve export control issues through the export control authorities of the Parties.

4.4.1.5. Transition management of this Project to PMSUP as development is completed and the system becomes operational.

4.4.2. PMSUP shall:

4.4.2.1. Maintain a direct liaison with the U.S. Military Departments, Joint Staff, Defense Information Systems Agency, MOD, OSD, other IPs, and users of the AEHF MILSATCOM System to identify system logistical provisioning requirements.

4.4.2.2. Manage the cost, schedule, performance, requirements, technical, security and financial aspects in accordance with Article V (Financial Arrangements) of this MOU.

4.4.2.3. Maintain the O&S FMPD that establishes the detailed financial management procedures under which the Project shall operate. These procedures shall be in accordance with the national accounting and audit requirements of the Parties.

4.4.2.4. Monitor export control arrangements required to implement this MOU and, if applicable, discuss and resolve export control issues through the export control authorities of the Parties.

4.4.2.5. Maintain oversight of the security aspects of the Project, including compliance with the PSI and the CG applicable to this MOU, and maintain the PSI and CG after the transition referenced in paragraph 4.1. of this Article occurs.

4.4.2.6. Coordinate amendments to this MOU in accordance with Article XVI (General Provisions) of this MOU.

4.4.2.7. Refer to the OSSC issues that cannot be resolved by the PMSUP.

4.4.2.8. Be assisted by the PMDEV and shall fully coordinate issues with operational implications with the SOM.

4.5. The DoD and MOD may assign qualified personnel to organizations contributing to the Project. Such personnel shall be integrated into an organizational element of the Parties and be responsible for executing tasks associated with the Project. These personnel may have been previously assigned to organizations contributing to the AEHF MILSATCOM Program in accordance with Annex B (The Exchange of Cooperative Project Personnel) to the 2002 MOU. Provisions for personnel assigned to organizations of the Parties contributing to this Project are set out in Annex B (Exchange of Cooperative Project Personnel) to this MOU.

4.6. In addition to the operations, oversight, management, and control of AEHF MILSATCOM System Resources as defined in Annex A (Operations and Support of the AEHF MILSATCOM System Project) to this MOU, the MOD shall follow the procedures established by the SOM for safe and efficient use of the system. Any issues associated with this arrangement shall be referred initially to the OSSC for resolution except that:

4.6.1. The MOD shall conduct reviews of MOD MILSATCOM requirements in accordance with internal MOD instructions for internal MOD consideration.

4.6.2. The MOD MILSATCOM requirements need not be incorporated in the DoD SATCOM Database (SDB) (i.e., MOD requirements shall not need a validated SDB number to use MOD Resources).

4.6.3. The MOD shall not be required to forward to DoD a listing of prioritized requirements, including requirements that cannot be filled using apportioned assets to the Joint Staff (this Information shall be kept internal to MOD).

4.6.4. The MOD shall not be required to prepare an annual report to DoD (Joint Staff and the Assistant Secretary of Defense (Networks and Information Integration)) (ASD/NII), or their successors in the event of reorganization, on commercial SATCOM operational use and associated costs.

ARTICLE V

FINANCIAL ARRANGEMENTS

5.1. Each Party shall contribute its equitable share of the full Financial Costs and Non-financial Costs of the Project including overhead costs, administrative costs, and costs of claims, and shall receive an equitable share of the results of the Project in accordance with this MOU.

5.2. All dollar references in this MOU are expressed in U.S. Then-Year Dollars. All time periods will be the U.S. Fiscal Year. No Non-financial contributions shall be made under this MOU.

5.2.1. The MOD estimated financial contribution for the period of U.S. FY2010 through U.S. FY2024 is $12.697M, or 0.83%, of the total Project costs, plus $2.133M, or 12.97%, of the total IP-specific support for a total MOD Financial Cost Ceiling that will not exceed $14.830M. These percentages represent the MOD's equitable share of their use of the AEHF MILSATCOM System Resources.

5.2.2. The DoD estimated financial contribution for the period of U.S. FY2010 through U.S. FY2024 shall not exceed a DoD Financial Cost Ceiling of $1529.809M.

5.2.3. The estimated total financial contributions under this MOU for the period of U.S. FY2010 through U.S. FY2024 shall not exceed a total Financial Cost Ceiling of $1544.639M. The DoD and MOD contributions shall be adjusted annually, upon approval of the Parties, based on the actual O&S costs of the AEHF Program and reflected in the FMPD in accordance with subparagraph 4.2.3. of Article IV (Management (Organization and Responsibilities)) of this MOU.

5.3. Each Party shall make funds available in accordance with the schedule of estimated financial contributions as described in the O&S FMPD. The schedule of financial contributions shall be consistent with the funding requirements of paragraph 5.2. of this Article.

5.4. The Parties may determine that it is necessary for one Party, consistent with its national laws and regulations, to incur contractual obligations for the benefit of the Parties. When so determined by the Parties, in the event one Party enters into a Contract or incurs other such contractual obligations for the benefit of the other Party, each Party shall pay its equitable share of such Contracts or other obligations. Each Party, on whose behalf the Contract or other obligation was incurred, shall make funds available in such amounts and at such times as may be required by the Contract and other obligations within the Financial Cost Ceiling and shall pay its equitable share of any damages and costs that may accrue from the performance of or cancellation of the Contract or other contractual obligation in advance of the time such payments, damages, or costs are due. Whenever possible, prior to Contract cancellation or amendment, the Contracting Party shall consult with the other Party concerning Contract cancellation or amendment.

5.5. Each Party shall bear the costs it incurs by performing, managing, and administering its activities under this MOU and all such costs shall be included as part of each Party's contribution to the Project. These costs include salaries, travel and per diem for its Project personnel, as well as any Contract costs.

5.6. The following costs shall be borne entirely by the Party incurring the costs or on whose behalf the costs are incurred:

5.6.1. Costs associated with national representation at meetings; and

5.6.2. Costs associated with any unique national requirements, such as:

5.6.2.1. Costs associated with establishing and maintaining communications path(s) between the DoD and MOD for O&S Information transfer necessitated by the MOD's participation in the Project.

5.6.2.2. Costs associated with follow-on training for MOD personnel on the AEHF MILSATCOM System, terminal operations and support, and planning and management tools.

5.6.2.3. Costs associated with installing hardware and software partitions to maintain separation between the Information of the Parties in systems planning, management, and control systems supporting the AEHF MILSATCOM System.

5.6.2.4. Any other costs not expressly stated as shared costs or any costs that are outside the scope of this MOU.

5.6.2.4.1. Costs associated with procurement, maintenance, and sustainment of Mission Planning Element (MPE) hardware and associated commercial software licenses and drivers are beyond the scope of this MOU. The DoD shall provide the MOD with access to U.S. MPE support infrastructure, whether government depot or Contractor support, for use by MOD on a reimbursable basis as outlined by future arrangements.

5.7. A Party shall notify the other Party promptly if available funds are not adequate to fulfill its responsibilities under this MOU. If a Party notifies the other Party that it is terminating or reducing its funding for the Project, both Parties shall consult immediately with a view toward continuation on a modified basis. In the event that the Parties mutually conclude, following consultation, that continuation on a modified basis is not practicable, then the provisions of Article XVI (General Provisions) of this MOU shall apply.

5.8. Each Party shall be responsible for internal audit scrutiny of the Project activities carried out by it, in accordance with its own national practices.

ARTICLE VI

CONTRACTING PROVISIONS

6.1. The DoD (acting through the Department of the Air Force) shall be responsible for Contracting for the Project in accordance with U.S. Contracting laws, regulations and procedures, including Federal Acquisition Regulation and Defense Federal Acquisition Regulation Supplement provisions, if any, specifically relating to Dutch products or Contractors. The DoD Contracting Officer(s) is the exclusive source for providing contractual direction and instructions to Contractors.

6.2. The PMSUP, assisted by the PMDEV prior to the transition from development to O&S referenced in paragraph 4.1. of Article IV (Management (Organization and Responsibilities)) of this MOU, shall be responsible for coordinating with the responsible Contracting Officer(s) in the areas of Contract procedures, Contract negotiation, evaluation of offers, and Contract award. The MOD may send representatives to the proposal evaluation team(s), subject to the approval of the source selection authority(ies). The PMDEV shall review statements of work prior to the development of solicitations to ensure that they are in accordance with this MOU. The DoD shall provide the MOD the opportunity to review statements of work related to the Project prior to development of solicitations. In addition, the Contracting Officer(s) shall keep the PMDEV/PMSUP advised of all financial arrangements with the prime Contractor(s).

6.3. Each Party's Contracting Agency shall insert into its prospective Contracts (and require its Contractors to insert in subcontracts) suitable provisions to satisfy the requirements of this MOU, including Article VIII (Disclosure and Use of Project Information), Article IX (Controlled Unclassified Information), Article XI (Security), Article XII (Third Party Sales and Transfers), and Article XVI (General Provisions), including suitable provisions to ensure compliance with the Parties' respective export control laws and regulations.

6.4. Each Party shall establish legal arrangements with its Contractors to ensure that Contractors do not retransfer or otherwise use export-controlled Information furnished by the other Party for any purpose other than the purposes authorized under this MOU. Such legal arrangements shall also provide that the Contractor shall also be legally bound to not retransfer the export-controlled Information to another Contractor or subcontractor unless that Contractor or subcontractor has been legally bound to limit use of the Information to the purposes authorized under this MOU. Export-controlled Information furnished by one Party under this MOU may only be retransferred by the other Party to its Contractors if the legal arrangements required by this paragraph have been established.

6.5. Each Party shall establish legal arrangements with its Prospective Contractors to ensure that its Prospective Contractors do not retransfer or otherwise use export-controlled Information furnished by the other Party for any purpose other than responding to a solicitation issued in furtherance of the purposes authorized under this MOU. Prospective Contractors shall not be authorized any other end use if they are not awarded a Contract. Such legal arrangements shall also provide that the Prospective Contractors shall not retransfer the export-controlled Information to a prospective subcontractor unless that prospective subcontractor has been legally

bound to limit use of the export-controlled Information for the purpose of responding to the solicitation. Export-controlled Information furnished by one Party under this MOU may only be retransferred by the other Party to its Prospective Contractors if the legal arrangements required by this paragraph have been established. Upon request, either Party shall provide the identity of Prospective Contractors and prospective subcontractors receiving export-controlled Information.

6.6. In the event the Contracting Officer is unable to secure adequate rights to use and disclose Project Information as required by Article VIII (Disclosure and Use of Project Information), or is notified by Contractors or Prospective Contractors of any restrictions on the disclosure and use of information, the matter shall be referred to the OSSC for resolution.

6.7. The PMSUP shall advise immediately the SOM and MOD Project Team Leader of any cost growth, schedule change, or performance problems that may affect MOD's contribution, Baseline Resources, or access to the AEHF MILSATCOM System.

6.8. No requirement shall be imposed by either Party for work sharing or other industrial or commercial compensation in connection with this MOU that is not in accordance with this MOU.

ARTICLE VII

PROJECT EQUIPMENT

7.1. Each Party may provide Project Equipment identified as being necessary for executing this MOU to the other Party. Project Equipment shall remain the property of the providing Party. A list of all Project Equipment, in the format of Appendix 1 to Annex A of this MOU, provided by one Party to another Party shall be developed and maintained by the PMDEV or PMSUP and shall be approved by the OSSC.

7.2. The receiving Party shall maintain any such Project Equipment in good order, repair, and operable condition. Unless the providing Party has authorized the Project Equipment to be expended or otherwise consumed without reimbursement to the providing Party, the receiving Party shall return the Project Equipment to the providing Party in as good condition as received, normal wear and tear excepted, or return the Project Equipment and pay the costs to restore it. If the Project Equipment is damaged beyond economical repair, the receiving Party shall return the Project Equipment to the providing Party (unless otherwise specified in writing by the providing Party) and pay its replacement value as computed pursuant to the providing Party's national laws, regulations, and procedures. If the Project Equipment is lost while in the custody of the receiving Party, the receiving Party shall issue a certificate of loss to the providing Party and pay the replacement value as computed pursuant to the providing Party's national laws, regulations, and procedures.

7.3. The providing Party shall deliver Project Equipment to the receiving Party at a mutually determined location. Possession of the Project Equipment shall pass from the providing Party to the receiving Party at the time of receipt of the Project Equipment. Any further transportation is the responsibility of the receiving Party.

7.4. All Project Equipment that is transferred shall be used by the receiving Party only for the purposes of carrying out this MOU unless otherwise consented to in writing by the providing Party. In addition, in accordance with Article XII (Third Party Sales and Transfers) of this MOU, Project Equipment shall not be retransferred to a Third Party without the prior written consent of the providing Party.

7.5. Project Equipment transferred to one Party under this MOU shall be returned to the providing Party prior to the termination or expiration of this MOU.

7.6. Any Project Equipment that is jointly acquired on behalf of both Parties for use under this MOU shall be disposed of during this Project or when the Project ceases, as approved by the OSSC.

7.7. Disposal of jointly acquired Project Equipment may include a transfer of the interest of one Party in such Project Equipment to the other Party, or the sale of such equipment to a Third Party in accordance with Article XII (Third Party Sales and Transfers) of this MOU. The Parties shall share the consideration from jointly acquired Project Equipment transferred or sold to a Third Party in the same ratio as costs are shared under this MOU.

ARTICLE VIII

DISCLOSURE AND USE OF PROJECT INFORMATION

8.1. General

8.1.1. The Parties recognize that successful collaboration depends on full and prompt exchange of Information necessary to carry out the Project. The Parties intend to acquire sufficient Project Information and rights to use such Information to enable the operation and support of the AEHF MILSATCOM Systems. The nature and amount of Project Information to be acquired shall be in accordance with this MOU and in particular Article II (Objectives), Article III (Scope of Work), and Article VI (Contracting Provisions) of this MOU.

8.1.2. The follow export control provisions shall apply to the transfer of Project Information:

8.1.2.1. Transfer of Project Information shall be consistent with the furnishing Party's applicable export control laws and regulations.

8.1.2.2. Unless otherwise restricted by duly authorized officials of the furnishing Party at the time of transfer to the other Party, all export-controlled Information furnished by one Party to the other Party may be retransferred to the other Party's Contractors, subcontractors, Prospective Contractors, and prospective subcontractors, subject to the requirements of paragraphs 6.4. and 6.5. of Article XI (Contracting Provisions) of this MOU.

8.1.2.3. Export-controlled Information may be furnished by Contractors, subcontractors, Prospective Contractors, and prospective subcontractors of one Party to the Contractors, subcontractors, Prospective Contractors, and prospective subcontractors of the other Party pursuant to this MOU, subject to the conditions established in licenses or other approvals issued by the Government of the former Party in accordance with its applicable export control laws and regulations.

8.1.2.4. If a Party finds it necessary to exercise a restriction on the retransfer of export-controlled Information as set out in subparagraph 8.1.2.2. of this Article, it shall promptly inform the other Party's OSSC representative. If a restriction is then exercised and the affected Party objects, that Party's OSSC representative shall promptly notify the other Party's OSSC representatives and they shall immediately consult in order to discuss ways to resolve such issues or mitigate any adverse effects.

8.1.3. Notwithstanding any other provision of this MOU, disclosure of Project Information shall only be in accordance with the Party's respective national disclosure policies. The Parties shall use their best efforts to maximize disclosure of Project

Information under this MOU to the extent permitted by their respective national disclosure policies.

8.1.4. Communications Security (COMSEC)/Transmission Security (TRANSEC) Information shall not be exchanged under this MOU but may be exchanged separately in accordance with arrangements made between the U.S. NSA and the National Communication Security Agency (NL NCSA) of the Netherlands.

8.2. Government Project Foreground Information: The following provisions shall apply to Project Foreground Information generated by a Party's military or civilian employees (hereinafter referred to as "Government Project Foreground Information").

8.2.1. All Government Project Foreground Information shall be disclosed without charge to both Parties.

8.2.2. Each Party may use all Government Project Foreground Information without charge for Defense Purposes. The Party generating Government Project Foreground Information shall also retain its rights of use thereto. Any sale or other transfer to a Third Party shall be subject to the provisions of Article XII (Third Party Sales and Transfers) of this MOU.

8.3. Government Project Background Information

8.3.1. Each Party, upon request, shall disclose promptly and without charge to the other Party any relevant Government Project Background Information generated by its military or civilian employees, provided that:

8.3.1.1. Such Government Project Background Information is necessary to or useful in the Project. The Party in possession of the Information shall determine whether it is "necessary to" or "useful in" the Project.

8.3.1.2. Such Government Project Background Information may be made available only if the rights of holders of intellectual property rights are not infringed.

8.3.1.3. Disclosure or transfer of such Government Project Background Information to Contractors is consistent with the furnishing Party's national disclosure laws and regulations.

8.3.1.4. Any disclosure or transfer of such Government Project Background Information to Contractors is consistent with the furnishing Party's export control laws and regulations.

8.3.2. Government Project Background Information disclosed by one Party to the other may be used without charge by the other Party for Project Purposes only; however, the

furnishing Party shall retain all its rights with respect to such Project Background Information.

8.4. Contractor Project Foreground Information: The following provisions shall apply to Project Foreground Information generated and delivered by Contractors (hereinafter referred to as "Contractor Project Foreground Information").

8.4.1. Contractor Project Foreground Information generated and delivered by Contractors shall be disclosed promptly and without charge to both Parties.

8.4.2. Each Party may use or have used, without charge for its Defense Purposes, all Contractor Project Foreground Information generated and delivered by Contractors of the other Party. The Party whose Contractors generate and deliver Contractor Project Foreground Information shall also retain all its rights of use thereto in accordance with the applicable Contract(s). Any sale or other transfer to a Third Party of Contractor Project Foreground Information shall be subject to the provisions of Article XII (Third Party Sales and Transfers) of this MOU.

8.5. Contractor Project Background Information: The following provisions shall apply to Project Background Information generated and delivered by Contractors (hereinafter referred to as "Contractor Project Background Information").

8.5.1. A Contracting Party shall make available to the other Party promptly and without charge all Contractor Project Background Information generated by Contractors that is delivered under Contracts awarded in accordance with this MOU. Any other Project Background Information that is generated by Contractors and that is in the possession of one Party shall be made available promptly and without charge to the other Party, upon its request, provided the following conditions are met:

8.5.1.1. Such Contractor Project Background Information is necessary to or useful in the Project, with the Party in possession of the Information determining whether it is "necessary to" or "useful in" the Project.

8.5.1.2. Such Contractor Project Background Information may be made available without incurring liability to holders of proprietary rights.

8.5.1.3. Disclosure of such Contractor Project Background Information is consistent with national disclosure policies and regulations of the furnishing Party.

8.5.1.4. Any disclosure or transfer of such Contractor Project Background Information to Contractors is consistent with the furnishing Party's export control laws and regulations.

8.5.2. Project Background Information furnished by one Party's Contractors and disclosed to the other Party may be used without charge by the other Party for Project

Purposes only, and may be subject to further restrictions by holders of proprietary rights; however, the furnishing Party shall retain all its rights with respect to such Project Background Information.

8.6. Alternative Uses of Project Information

8.6.1. Any Project Background Information provided by one Party shall be used by the other Party only for the purposes set forth in this MOU, unless otherwise consented to in writing by the providing Party.

8.7. Proprietary Project Information

8.7.1. All Project Information that is subject to disclosure and use restrictions with respect to intellectual property rights shall be identified and marked, and it shall be handled as Controlled Unclassified Information or as Classified Information, depending on its security classification.

8.7.2. The provisions of the NATO Agreement on the Communication of Technical Information for Defence Purposes, done at Brussels on October 19, 1970, and the Implementing Procedures for the NATO Agreement on the Communication of Technical Information for Defence Purposes, approved by the North Atlantic Council on January 1, 1971 (or any successor agreement and procedures) shall apply to Project Information that is subject to intellectual property rights.

8.8. Patents

8.8.1. Each Party shall include in its Project-related Contracts a provision governing the disposition of rights in regard to Project Inventions and Patent rights relating thereto, which either:

8.8.1.1. Provides that the Party shall hold title to all Project Inventions together with the right to make Patent application for the same, free of encumbrance from the Contractor; or

8.8.1.2. Provides that the Contractor shall hold title (or may elect to retain title) for Project Inventions together with the right to make Patent applications for the same, while securing for the Party a license for the Project Inventions, and any Patents therefore, on terms in compliance with the provisions of paragraph 8.8.2. below.

8.8.2. In the event that a Contractor holds title (or elects to retain title) for a Project Invention, the Contracting Party shall secure for the Parties non-exclusive, irrevocable, royalty-free licenses under all Patents secured for that invention, to practice or have practiced the patented Project Invention throughout the world for Defense Purposes.

8.8.3. The provisions of subparagraphs 8.8.4. through 8.8.7. of this Article shall apply in regard to Patent rights for all Project Inventions made by the Parties' military or civilian employees, including those within Government-owned facilities, and for all Project Inventions made by Contractors for which the Contracting Party holds title or is entitled to acquire title.

8.8.4. When a Party has or can secure the right to file a Patent application with regard to a Project Invention, that Party shall consult the other Party regarding the filing of such Patent application. The Party having such rights shall in other countries, file, cause to be filed, or provide the other Party with the opportunity to file on behalf of the Party holding such rights, or its Contractors, as appropriate, Patent applications covering any such Project Invention. A Party shall immediately notify the other Party that a Patent application has been filed. If a Party having filed or caused to be filed a Patent application abandons prosecution of the application or ceases maintaining the Patent granted or issued on the application, that Party shall notify the other Party of that decision and shall permit the other Party to continue the prosecution or maintain the Patent as the case may be.

8.8.5. Each Party shall be furnished by the other Party with the applications and Patent numbers of the Patent applications filed and Patents granted with regard to Project Inventions, and an English copy of the Patent specification for each invention filed.

8.8.6. Each Party shall grant to the other Party a non-exclusive, irrevocable, royalty-free license under its Patents for Project Inventions, to practice or have practiced the patented Project Invention throughout the world for Defense Purposes.

8.8.7. Patent applications to be filed, or assertions of other intellectual property rights under this MOU that contain Classified Information, shall be protected and safeguarded in a manner no less stringent than the requirements contained in the NATO Agreement for the Mutual Safeguarding of Secrecy of Inventions Relating to Defence and for Which Applications for Patents Have Been Made, done in Paris on September 21, 1960, and its Implementing Procedures (or any successor agreement and procedures).

8.8.8. Each Party shall notify the other Party of any intellectual property infringement claims brought against that Party arising in the course of work performed under the Project on behalf of the other Party. Insofar as possible, the other applicable Party shall provide Information available to it that may assist in defending such claims. Each Party shall be responsible for handling such intellectual property infringement claims brought against it, and shall consult with the other Party during the handling, and prior to any settlement, of such claims. The Parties shall share the costs of resolving such intellectual property infringement claims in proportion to their financial contributions for that work specified in Article V (Financial Arrangements) of this MOU.

8.8.9. The Parties shall, as permitted by their national laws, regulations, and practices, give their authorization and consent for all use and manufacture in the course of work performed under the Project of any invention covered by Patent, or as determined to be

necessary for work under the Project, authorization and consent for non-commercial copyright granted or otherwise provided by their respective countries.

ARTICLE IX

CONTROLLED UNCLASSIFIED INFORMATION

9.1. Except as otherwise provided in this MOU, or authorized in writing by the originating Party, Controlled Unclassified Information provided or generated pursuant to this MOU shall be controlled as follows:

9.1.1. Such Information shall be used only for the purposes authorized for use of Project Information as specified in Article VIII (Disclosure and Use of Project Information) of this MOU.

9.1.2. Access to such Information shall be limited to personnel whose access is necessary for the permitted use under subparagraph 9.1.1. of this Article, and shall be subject to the provisions of Article XII (Third Party Sales and Transfers) of this MOU.

9.1.3. Each Party shall take all lawful steps, which may include national classification, available to it to keep such Information free from further disclosure (including requests under any legislative provisions), except as provided in subparagraph 9.1.2. of this Article, unless the originating Party consents to such disclosure. In the event of unauthorized disclosure, or if it becomes probable that the Information may have to be disclosed further under any legislative provision, immediate notification shall be given to the originating Party.

9.2. To assist in providing the appropriate controls, the originating Party shall ensure that Controlled Unclassified Information is appropriately marked to ensure its "in confidence" nature. The Parties' export-controlled information shall be marked in accordance with the applicable Party's export control markings as documented in the Project Security Instruction (PSI). The Parties shall also decide, in advance and in writing, on the markings to be placed on any other types of Controlled Unclassified Information and describe such markings in the PSI.

9.3. Controlled Unclassified Information provided or generated pursuant to this MOU shall be handled in a manner that ensures control as provided for in paragraph 9.1. of this Article.

9.4. Prior to authorizing the release of Controlled Unclassified Information to Contractor(s), the Parties shall ensure the Contractor(s) are legally bound to control such Information in accordance with the provisions of this Article.

ARTICLE X

VISITS TO ESTABLISHMENTS

10.1. Each Party shall permit visits to its Government establishments, agencies and laboratories, and Contractor industrial facilities by employees of the other Party, or by employees of the other Party's Contractor(s), provided that the visit is authorized by both Parties and the employees have any necessary and appropriate security clearances and a need-to-know.

10.2. All visiting personnel shall be required to comply with security regulations of the hosting Party. Any Information disclosed or made available to visitors shall be treated as if supplied to the Party sponsoring the visiting personnel, and shall be subject to the provisions of this MOU.

10.3. Requests for visits by personnel of one Party to a facility of the other Party shall be coordinated through official channels, and shall conform with the established visit procedures of the hosting Party. Requests for visits shall bear the name of the Project.

10.4. Lists of personnel of each Party required to visit, on a continuing basis, facilities of the other Party shall be submitted through official channels in accordance with recurring international visit procedures.

ARTICLE XI

SECURITY

11.1. All Classified Information provided or generated pursuant to this MOU shall be stored, handled, transmitted and safeguarded in accordance with the General Security of Information Agreement between the Kingdom of The Netherlands and the United States of America, which entered into effect August 18, 1960, as amended, and including the Industrial Security Agreement of March 13, 2006.

11.2. Classified Information shall be transferred only through official Government-to-Government channels or through channels approved by the Designated Security Authorities (DSAs) of the Parties. Such Classified Information shall bear the level of classification, denote the country of origin, and the conditions of release, declassification instructions and the fact that the Information relates to this MOU.

11.3. Each Party shall take all lawful steps available to ensure that Information provided or generated pursuant to this MOU is protected from further disclosure, except as provided by this Article unless the other Party consents to such disclosure. Accordingly, each Party shall ensure that the recipient:

> 11.3.1. Shall not release Classified Information to any government, national, organization, or other entity of a Third Party without the prior written consent of the originating Party, in accordance with the procedures set forth in Article XII (Third Party Sales and Transfers) of this MOU.
>
> 11.3.2. Shall not use Classified Information for other than the purposes provided for in this MOU.
>
> 11.3.3. Shall comply with any distribution and access restrictions on Information that is provided under this MOU.

11.4. The Parties shall investigate all cases in which it is known or in which there are grounds for suspecting that Classified Information or material provided or generated pursuant to this MOU has been lost or disclosed to unauthorized persons. Each Party also shall promptly and fully inform the other Party of the details of any such occurrences, and of the final results of the investigation and of the corrective action taken to preclude recurrence.

11.5. The PSI and a CG, as developed in accordance with the 2002 MOU, shall be maintained for the Project in accordance with subparagraphs 4.4.1.3. and 4.4.2.5. of Article IV (Management (Organization and Responsibilities)) of this MOU. The PSI and the CG shall describe the methods by which Project Information shall be classified, marked, used, transmitted, and safeguarded, and shall require that markings for all export-controlled Classified Information shall include the applicable export control markings identified in the PSI in accordance with paragraph 9.2. of Article IX (Controlled Unclassified Information) of this MOU. The PSI and the CG shall be reviewed and forwarded to the Parties' DSAs for approval and shall be applicable to all

Government and Contractor personnel participating in the Project. The CG shall be subject to regular review and revision with the aim of downgrading the classification whenever this is appropriate. The PSI and the CG shall be approved by the appropriate DSA prior to the transfer of any Classified Information or Controlled Unclassified Information.

11.6. For any facility wherein Classified Information or material is to be used, the responsible Party shall approve the appointment of a person or persons to exercise effectively the responsibilities for safeguarding at such facility the Information or material pertaining to this MOU. Such official(s) shall be responsible for limiting access to Classified Information or material involved in this MOU to those persons who have been properly approved for access and have a need-to-know.

11.7. Each Party shall ensure that access to the Classified Information is limited to those persons who possess requisite security clearances and have a specific need for access to the Information in order to participate in this MOU.

11.8. The DSA of the country in which a classified Contract is awarded pursuant to this MOU shall assume responsibility for administering within its territory security measures for the protection of the Classified Information, in accordance with its laws and regulations. Prior to the release to a Contractor, Prospective Contractor, or subcontractor of any Classified Information received under this MOU, the DSAs shall:

11.8.1. Ensure that such Contractor, Prospective Contractor, or subcontractors and their facilities have the capability to protect the Classified Information adequately.

11.8.2. Grant a security clearance to the facilities, if appropriate.

11.8.3. Grant a security clearance for all personnel whose duties require access to Classified Information, if appropriate.

11.8.4. Ensure that all persons having access to the Classified Information are informed of their responsibilities to protect the Classified Information in accordance with Parties' national security laws and regulations, and the provisions of this MOU.

11.8.5. Carry out periodic security inspections of cleared facilities to ensure that the Classified Information is properly protected.

11.8.6. Ensure that access to the Classified Information is limited to those persons who have a need-to-know for purposes of this MOU.

11.9. Contractors, Prospective Contractors, or subcontractors that are determined by DSAs to be under financial, administrative, policy, or management control of nationals or entities of a Third Party, may participate in a Contract or subcontract requiring access to Classified Information provided or generated pursuant to this MOU only when enforceable measures are in effect to ensure that nationals or other entities of a Third Party shall not have access to Classified Information. If enforceable measures are not in effect to preclude access by nationals or other

entities of a Third Party, the other Party shall be consulted for approval prior to permitting such access.

11.10. Information or material provided or generated pursuant to this MOU may be classified as high as SECRET. The existence of this MOU is unclassified and the contents are unclassified.

ARTICLE XII

THIRD PARTY SALES AND TRANSFERS

12.1. The DoD shall retain the right to sell, transfer title to, disclose, or transfer possession of Project Foreground Information, jointly acquired or produced Project Equipment, or any item produced either wholly or in part from Project Foreground Information to Third Parties.

12.2. The MOD shall not sell, transfer title to, disclose, or transfer possession of Project Foreground Information (or any item produced either wholly or in part from the Project Foreground Information) or jointly acquired or produced Project Equipment to any Third Party without the prior written consent of the U.S. Government. Furthermore, the MOD shall not permit any such sale, disclosure, or transfer by others, including the owner of the item, without the prior written consent of the U.S. Government. The MOD recognizes that such sales, disclosure, or other transfers shall not be authorized by the U.S. Government unless the Government of the intended recipient confirms in writing to the DoD it shall:

12.2.1. Not retransfer or permit the further retransfer of any equipment or Information provided.

12.2.2. Use or permit the use of the equipment or Information provided only for the purposes specified by the contributing Parties.

12.3. A Party shall not sell, transfer title to, disclose, or transfer possession, grant, donate or transfer usage rights of Project Equipment or Project Background Information provided by the other Party to any Third Party without the prior written consent of the Government of the Party that provided such equipment or Information. The providing Party's Government shall be solely responsible for authorizing such transfers and, as applicable, specifying the method and provisions for implementing such transfers.

12.4. In accordance with paragraph 4.1. of Annex A (Operations and Support of the AEHF System Project) to this MOU, for the purpose of one IP loaning apportioned satellite Resources to another IP, the exchange of Project Background and Project Foreground Information between the IPs in support of such loan shall not be considered a Third Party transfer. Accordingly, usage of one IPs apportioned satellite Resources by another IP shall not be considered a Third Party transfer.

12.5. Employees and agents of Contractors are not considered civilian personnel of a Party for the purposes of this Section.

ARTICLE XIII

LIABILITY AND CLAIMS

13.1. Claims against either Party or its personnel shall be dealt with in accordance with the terms of Article VIII of the NATO Status of Forces Agreement (NATO SOFA), dated June 19, 1951. Civilian employees of the Parties assigned to duty within their government's Defense Department or Ministry shall be deemed for the purpose of Article VIII of NATO SOFA to be members of a civilian component within the meaning of Article I of the NATO SOFA while present in the territory of the other Party for the purpose of this MOU.

13.2. Claims arising under or related to any Contract awarded pursuant to Article VI (Contractual Arrangements) shall be resolved in accordance with the provision of the Contract.

13.3. Employees and agents of Contractors shall not be considered to be civilian personnel employed by a Party for the purpose of paragraph 13.1. of this Article.

ARTICLE XIV

CUSTOMS DUTIES, TAXES AND SIMILAR CHARGES

14.1. Customs duties, import and export taxes, and similar charges shall be administered in accordance with each Party's respective laws and regulations. Insofar as existing national laws and regulations permit, the Parties shall endeavor to ensure that such readily identifiable duties, import and export taxes, and similar charges, as well as quantitative or other restrictions on imports and exports, are not imposed in connection with work carried out under this MOU.

14.2. Each Party shall use its best efforts to ensure that customs duties, import and export taxes, and similar charges are waived or otherwise administered in a manner favorable to the efficient and economical conduct of the work of this Project. If any such duties, import and export taxes, or similar charges are levied, the Party in whose country they are levied shall bear such costs.

14.3. If, in order to apply European Union (EU) regulations, it is necessary to levy duties, then these shall be met by the Netherlands. To this end, parts or components of the equipment coming from outside of the EU shall proceed to their final destination accompanied by the relevant customs document enabling settlement of duties to take place. The duties shall be paid as a cost over and above the Netherlands costs of this MOU.

ARTICLE XV

SETTLEMENT OF DISPUTES

15.1. Disputes between the Parties arising under or relating to this MOU shall be resolved only by consultation between the Parties and shall not be referred to a national court, an international tribunal, or to any other person or entity for settlement.

ARTICLE XVI

GENERAL PROVISIONS

16.1. All activities of the Parties under this MOU shall be carried out in accordance with their respective national laws and regulations, including their respective export control laws and regulations. The obligations of the Parties shall be subject to the availability of funds for such purposes.

16.2. Annexes to this MOU are an integral part of this MOU. In the event of a conflict between an Article of this MOU and any Annex to this MOU, the MOU Article shall control.

16.3. This MOU may only be amended by the mutual written consent of the Parties. Annexes to this MOU may be amended by the written approval of the OSSC, after having secured appropriate national approval. The OSSC may enter into arrangements that are within the scope of this MOU, after having secured appropriate national approval.

16.4. This MOU may be terminated at any time upon the mutual written consent of the Parties. In the event both Parties consent to terminate this MOU, the Parties shall consult prior to the date of termination to ensure termination on the most economical and equitable terms.

16.5. Either Party may terminate this MOU upon 90 days written notification to the other Party. Such notice shall be the subject of immediate consultation by the OSPO to decide upon the appropriate course of action to be recommended to the OSSC. In the event of such termination, the following rules apply:

16.5.1. If, as a result of the termination of this MOU by the DoD, the MOD is denied access to the AEHF Baseline Resources guaranteed to the MOD under Annex A of the 2002 MOU, the DoD shall provide the MOD with compensation for the loss of this access.

16.5.2. The Party terminating shall continue participation, financial and otherwise, up to the effective date of termination.

16.5.3. Except as to Contracts awarded on behalf of both Parties, each Party shall be responsible for its own Project-related costs associated with termination of the Project. For contracts awarded on behalf of both Parties, the terminating Party shall pay all Contract modification or termination costs that would not otherwise have been incurred but for the decision to terminate; in no event, however, shall a terminating Party's total financial contribution, including Contract termination costs, exceed that Party's total share of the Financial Cost Ceiling for financial contributions as established in Article V (Financial Arrangements) of this MOU.

16.5.4. All Project Information and rights therein received under the provisions of this MOU prior to the termination shall be retained by the Parties, subject to the provisions of this MOU.

16.6. The respective rights and responsibilities of the Parties regarding Article VII (Project Equipment), Article VIII (Disclosure and Use of Project Information), Article IX (Controlled Unclassified Information), Article XI (Security), Article XII (Third Party Sales and Transfers), Article XIII (Liability and Claims), Article XV (Settlements of Disputes), and this Article of this MOU shall continue notwithstanding termination or expiration of this MOU.

16.7. This MOU, which consists of sixteen (16) Articles and two (2) Annexes, shall enter into force upon signature by both Parties and shall remain in force until September 30, 2024, unless earlier terminated, superseded, or amended. However, it is anticipated that the Parties shall extend this MOU until the last AEHF satellite is removed from service. Upon expiration or termination of the 2002 MOU, the Baseline Resources defined in the 2002 MOU shall continue to be provided and governed by the terms of this MOU, until expiration or termination of this MOU.

The foregoing represents the understandings reached between the Department of Defense of the United States of America and the Minister of Defence of the Kingdom of The Netherlands upon the matters referred to therein.

IN WITNESS WHEREOF, the undersigned being duly authorized by their governments, have signed this MOU.

SIGNED in duplicate.

FOR THE DEPARTMENT OF DEFENSE
OF THE UNITED STATES OF
AMERICA:

Richard E Perraut Jr

Signature

RICHARD E. PERRAUT, JR., Maj Gen, USAF

Name

Deputy Under Secretary of the Air Force
International Affairs (Acting)

Title

21 AUG 10

Date

Pentagon, Washington DC

Location

The foregoing represents the understandings reached between the Department of Defense of the United States of America and the Minister of Defence of the Kingdom of The Netherlands upon the matters referred to therein.

IN WITNESS WHEREOF, the undersigned being duly authorized by their governments, have signed this MOU.

SIGNED in duplicate.

FOR THE MINISTER OF DEFENCE OF
THE KINGDOM OF THE
NETHERLANDS:

Signature

Mels de Zeeuw, Maj Gen

Name

Director Projects and Procurement

Title

26 August 2010

Date

The Hague, The Netherlands

Location

ANNEX A

TO THE

MEMORANDUM OF UNDERSTANDING

BETWEEN

THE SECRETARY OF DEFENSE
ON BEHALF OF THE DEPARTMENT OF DEFENSE
OF THE UNITED STATES OF AMERICA

AND

THE MINISTER OF DEFENCE
OF THE KINGDOM OF THE NETHERLANDS

CONCERNING

THE OPERATIONS AND SUPPORT OF THE

ADVANCED EXTREMELY HIGH-FREQUENCY

MILITARY SATELLITE COMMUNICATIONS SYSTEM

PROJECT

TABLE OF CONTENTS

1.0. Introduction

2.0. System Description
- 2.1. System Overview
- 2.2. Baseline Resources
- 2.3. AEHF Owner
- 2.4. AEHF Segments
  - 2.4.1. Space Segment
  - 2.4.2. Control Segment
  - 2.4.3. Terminal Segment

3.0. SATCOM Operation
- 3.1. Organizational Management Structure
  - 3.1.1. Oversight
  - 3.1.2. System Level Staff Support
  - 3.1.3. 24-Hour Operations Centers
  - 3.1.4. Crypto and Key Management
  - 3.1.5. Key Management
- 3.2. SATCOM Operational Manager (SOM)
- 3.3. Global SATCOM Support Centers (GSSC)
  - 3.3.1. Organizational Concept
  - 3.3.2. GSSC Functions Supporting the MOD
- 3.4. System Planning
  - 3.4.1. Mission Planning Element (MPE) Configuration
  - 3.4.2. System Level Planning
  - 3.4.3. Combatant Commander/MOD Communications Planning Staffs
  - 3.4.4. Subordinate Level Communications Planners
  - 3.4.5. System Access Levels

4.0. Resource Management and Control
- 4.1. Apportionment Planning
  - 4.1.1. Baseline Resources
  - 4.1.2. Unused Resources Outside the MOD Baseline Apportionment
  - 4.1.3. Fenced Non-Baseline Resources
  - 4.1.4. Exchanging Resources
  - 4.1.5. System Degradation
- 4.2. Resource Control
  - 4.2.1. Antenna Pointing and Control
  - 4.2.2. Constellation Configuration Changes
  - 4.2.3. Satellite Positioning
- 4.3. Life Cycle Support
- 4.4. Coalition Operations

5.0. Terminal Operations
- 5.1. International Partner (IP) Terminal Operations
- 5.2. MOD Terminal Operation
- 5.3. Terminal Upgrades

6.0. Cryptographic Equipment
- 6.1. TRANSEC
  - 6.1.1. TRANSEC Operational Concept
  - 6.1.2. Key Control and Distribution
- 6.2. COMSEC

Figures

Figure A-1 AEHF SATCOM System Operational Management Structure
Figure A-2 Notional AEHF Mission Planning Element Interfaces

Appendices

Appendix 1 Sample Format for Project Equipment

1.0. Introduction

1.1. This is an Annex to the Memorandum of Understanding (MOU) between the Department of Defense (DoD) of the United States of America and the Minister of Defence (MOD) of the Kingdom of the Netherlands Concerning Operations and Support of AEHF Military Satellite Communications (MILSATCOM) System. This Annex provides details of the Operations and Support (O&S) provisions for integrating MOD O&S requirements into the AEHF MILSATCOM System.

2.0. System Description

2.1. System Overview. The AEHF Program shall purchase a worldwide Extremely High Frequency (EHF) capability that shall replace the Milstar system. The AEHF system shall provide a new Space Segment in addition to the mission Control Segment for survivable, jam-resistant, worldwide, and secure communications for strategic and tactical warfighters. The AEHF Program shall use as much commercial off-the-shelf technology as possible and shall ensure that technology development produces a satellite that can be launched on a medium-class launch vehicle. Launches of the four AEHF satellites shall occur beginning in Calendar Year 2010. Worldwide coverage shall be provided through the launch of subsequent AEHF and/or AEHF-compatible satellites. MOD requirements shall be integrated into the DoD's operations and support architecture and the MOD shall be provided their Baseline Resources in accordance with Annex A (AEHF Project System Description and Capacity Sharing Terms and Conditions) to the 2002 MOU.

2.2. Baseline Resources.

2.2.1. The Baseline Resources, which are set forth in the 2002 MOU, were based on specific Information regarding orbital positions at that time. U.S. operational priorities, International Telecommunication Union orbital position approval, and other considerations may require the DoD SATCOM Operations Manager (SOM) to place the satellites in orbital positions that are different from those identified in paragraph 3.1. of the 2002 MOU. If this occurs then the DoD shall coordinate with the MOD to a.) reapportion the MOD Baseline Apportionment to other DoD EHF satellites in a manner that best approximates the resource usage identified in Annex A (AEHF Project System Description and Capacity Sharing Terms and Conditions) of the 2002 MOU, or b.) maintain the Baseline Apportionment as identified in Annex A of the 2002 MOU, which shall require MOD terminals to be under the field of view of the repositioned satellite(s) to access the MOD Resources.

2.3. AEHF Owner. The AEHF MILSATCOM System shall be DoD-owned and operated. The DoD shall assign/allocate satellite communications resources to the MOD, and the MOD shall then control its Baseline Resources. The MOD, as the "controller" of its Resources, shall manage its Baseline Resources and have the right to use those Baseline Resources as documented within the terms and conditions of this Annex.

2.4. AEHF Segments. The AEHF MILSATCOM System consists of three segments: Space, Control, and Terminal. General responsibilities for each segment are outlined below.

2.4.1. Space Segment. The AEHF MILSATCOM System Space Segment shall consist of the AEHF spacecraft and all related components. The DoD shall retain all responsibilities including launch operations, payload configuration, crosslink connectivity, and satellite bus maintenance.

2.4.2. Control Segment. The AEHF MILSATCOM System Control Segment includes the DoD systems used to control the satellite bus and payloads on AEHF capable satellites as well as the tools required to plan and manage communications Resources. The DoD shall retain full and exclusive satellite bus control. The DoD shall use a communication control, planning, and management system to control the AEHF satellite payloads. The DoD shall provide the MOD with a communication control, planning, and management capability to enable the MOD to control their Baseline Resources as detailed in this Annex. In the event that this system is not available for use by MOD, the system at the Global SATCOM Support Center (GSSC) International Partner (IP) Support Cell shall provide planning and monitoring support. This support shall continue until the MOD system is available or at the request of the MOD.

2.4.3. Terminal Segment. The DoD is developing multiple terminals to operate with the AEHF MILSATCOM System and the MOD may purchase these terminals from the responsible AEHF Terminal Program Office (TPO). Terminals with the AEHF Communications Security (COMSEC)/Transmissions Security (TRANSEC) System (ACTS) cryptographic components shall be purchased via Foreign Military Sales (FMS). Support of these terminals is outside the purview of this Annex. Support arrangements must be made with the respective TPO for support of the terminals at the time of purchase.

3.0. SATCOM Operations

3.1. Organizational Management Structure. As depicted in Figure A-1, the current concept for management of the AEHF MILSATCOM System shall have three levels: oversight, system level staff support, and 24-hour operations centers. The MOD shall be able to control its AEHF Baseline Resources consistent with the SATCOM Operation Management structure as depicted below in Figure A-1 and the DoD-MOD coordinated CONOPS and CNIP. In particular, the MOD shall be able to control its Space Segment Baseline Resources directly, obtaining support from the DoD SATCOM Operational Management structure, when required.

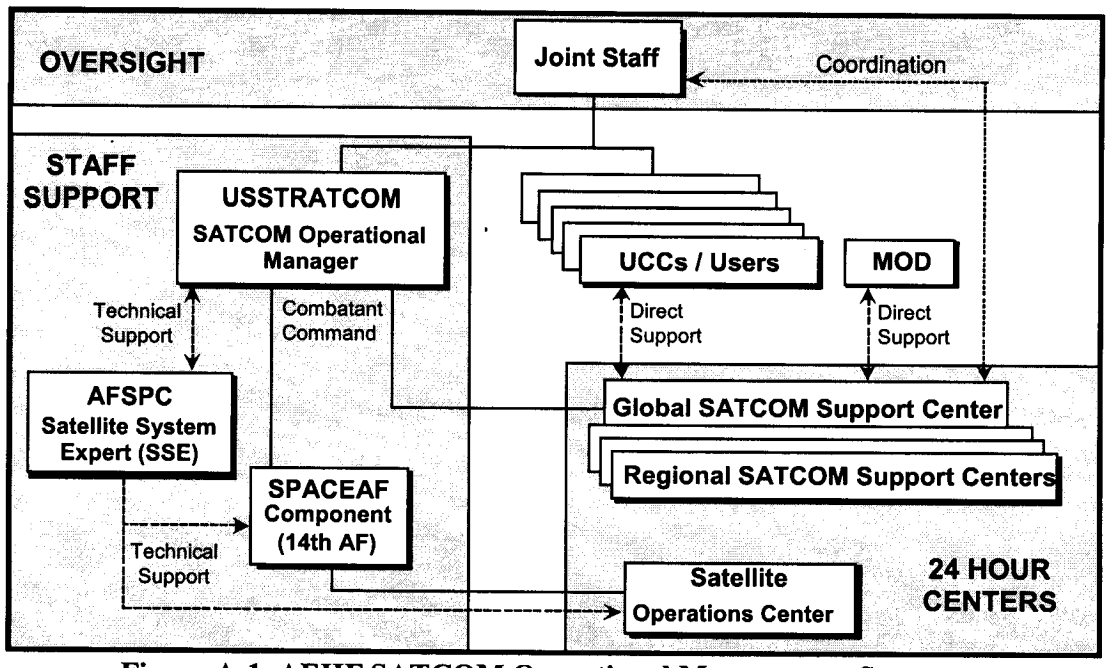

Figure A-1. AEHF SATCOM Operational Management Structure

3.1.1. Oversight. The U.S. DoD performs operational oversight functions. These functions are currently accomplished primarily via the JS/J6. The JCSC shall adjudicate Apportionment and Allocation contention between two or more authorized DoD and/or non-DoD users for the same on-orbit satellite assets during all phases of operations, from peacetime to war. In the event the MOD believes that it has not received its Baseline Resources, the MOD may directly request the JCSC initiate the adjudication process to resolve the baseline Apportionment issues. The MOD shall have an organization with similar responsibilities for the MOD owned assets. The MOD shall conform to the technical and operational rules of the AEHF MILSATCOM System as outlined in subparagraph 4.6. of Article IV (Management (Organization and Responsibilities)) of this MOU.

3.1.2. System Level Staff Support. U.S. Strategic Command (USSTRATCOM), as the SOM, and the U.S. Air Force Space Command (AFSPC) as the SATCOM System Expert (SSE), shall perform staff support and management functions for the AEHF MILSATCOM System. Direct support personnel at the GSSC shall assist IPs with activities such as Apportionment requirements and planning and direct support for change management. The MOD shall use these support personnel as required to satisfy their national requirements.

3.1.3. 24-Hour Operations Centers. The GSSC and Regional SATCOM Support Centers (RSSCs) provide the operational interface with users on a 24-hour basis. The primary support for the MOD shall be the GSSC. The support personnel at the support centers shall assist with global and regional direct support to DoD and

MOD SATCOM users. The USSTRATCOM Satellite Operations Center (SOC) is responsible for satellite control and payload control execution.

3.1.4. Crypto and Key Management. The MOD shall receive AEHF keys from the IP Local AEHF Key Management Stations. Keys shall be transmitted in accordance with the Key Management Plan.

3.1.5. Key Management Plan. The MOD shall submit an Appendix to the Key Management Plan prepared by the TPOs for each terminal they procure.

3.2. SATCOM Operational Manager (SOM). The DoD organization responsible for the Apportionment, Allocation, management, and control of MILSATCOM Resources to ensure access for Combatant Commands and other users.

3.3. Global SATCOM Support Center (GSSC). The GSSC shall provide DoD and MOD users the day-to-day operational interface. The GSSC shall support Combatant Commands and other users in managing their apportioned SATCOM Resources and real-time Allocation of non-apportioned Resources.

3.3.1. Organizational Concept. SATCOM support centers include both global and regional elements (GSSC and RSSCs). MOD users shall make use of the GSSC as their focal point for SATCOM planning, management, and access support. The GSSC has the responsibility to maintain the global system-of-systems SATCOM picture, coordinate the activities of the regional centers, and support national or global users not assigned to regions. The GSSC shall provide planning, management, and access support to the MOD on the same basis as it does for U.S. Combatant Commands.

3.3.2. GSSC Functions Supporting the MOD. The GSSC provides the central operational focus for global constellation payload management. The GSSC shall support the MOD, as necessary, by:

3.3.2.1. Performing "what if" drills, analyzing scenarios, and providing assessments.

3.3.2.2. Assisting users in day-to-day management of apportioned and non-apportioned Resources, accepting and analyzing SATCOM requirements and developing solutions, and coordinating resource sharing, as well as administering satellite access authorizations for Apportionment owners.

3.3.2.3. Providing assistance to the MOD when there is a disruption in service and coordinating anomaly resolution between the AEHF SOC and the MOD.

3.4. System Planning. DoD and MOD System planning and management for the AEHF Resources shall be accomplished through the Mission Planning Element (MPE). The

MPE shall be a dynamic, flexible system that shall allow planners to perform requirements analysis, develop system configuration changes, perform communications resource monitoring, and support the contingency planning process. The MPE shall provide the distributed planning capability necessary to support the AEHF philosophy of centralized control and decentralized execution.

3.4.1. MPE Configuration. DoD MPEs shall be connected via the Secret Internet Protocol Router Network (SIPRNET) to DoD planners. The SIPRNET is a U.S.-only network; therefore, the DoD and MOD shall need to identify a separate communications path for coordination and dissemination of planning and operational Information to MOD MPE users. DoD and MOD MPEs shall be located at the GSSC level, at MOD communications planning staff locations, and lower-level communications planning locations as identified by the MOD. Locations shall have access to different categories and quantities of data and be able to perform various planning functions. Figure A-2 shows the notional MPE interface with the AEHF MILSATCOM System.

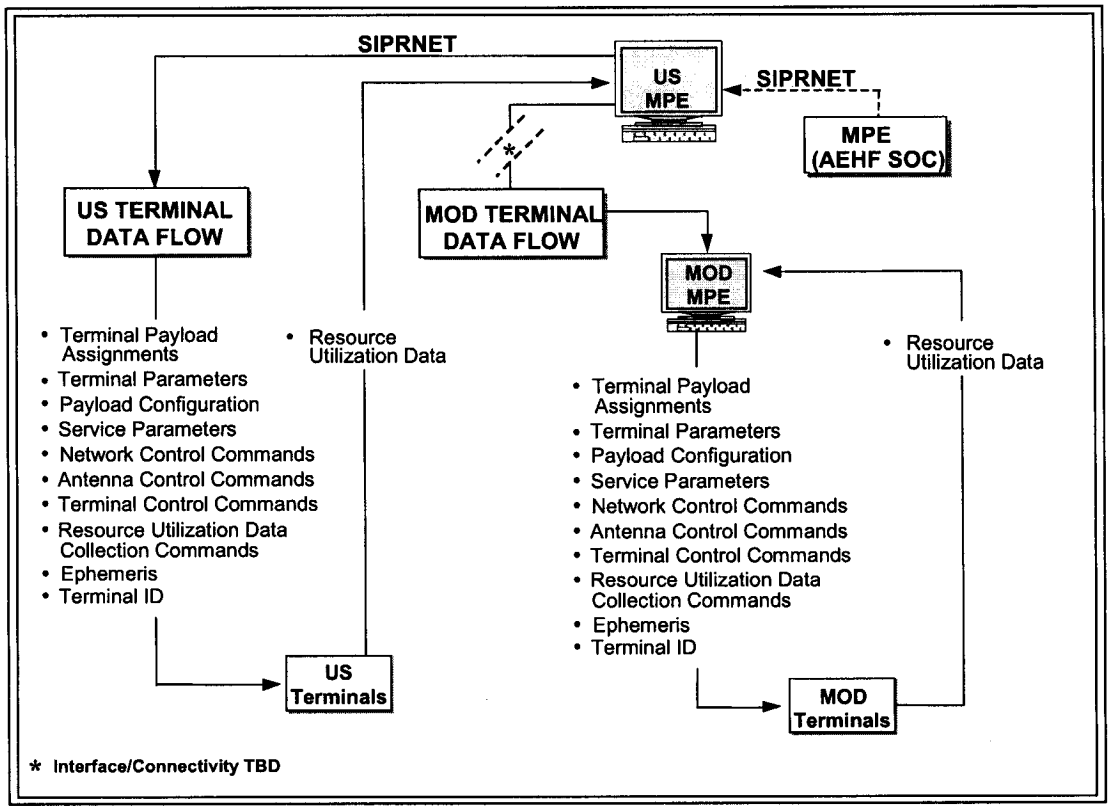

Figure A-2. Notional AEHF Mission Planning Element Interfaces

3.4.2. System Level Planning. The AEHF SSE/SOC/GSSC shall use the MPE for system-level planning, requirements analysis, generation of payload table values, preparation of recommended Apportionment, and distribution of terminal

operational parameters to U.S. Combatant Commanders, service terminal data nodes, and to the MOD. System monitoring and trend analysis shall be performed at the AEHF SSE/SOC/GSSC level.

3.4.3. Combatant Commander/MOD Communications Planning Staffs. The MPE at the GSSC/Combatant Commander/MOD level shall be used for planning, executing, controlling, and monitoring communications networks. It shall provide an integrated set of planning tools for Allocation of AEHF Resources to lower-level components. Capability shall be provided to AEHF Users, including the MOD, to access data necessary for monitoring the status of their Baseline Resources. The Combatant Commands shall not be able to monitor the status of MOD Baseline Resources, and vice versa. The MOD may use the MPE to produce terminal network parameters for development of terminal images and terminal execution plans. The MPE shall provide the following capabilities for the MOD:

3.4.3.1. Allow for Allocation and partitioning of MOD Baseline Resources.

3.4.3.2. Provide MOD communications planners visibility into the availability of Resources under their control.

3.4.3.3. Provide MOD communications planners the ability to produce network configuration data and reconfigure networks to meet mission needs (e.g., assign Priority, Precedence, and Privilege levels, data rates, modulation modes, etc. for terminals).

3.4.3.4. Provide the Information required to loan and borrow Resources to/from U.S. Combatant Commanders or other IPs.

3.4.3.5. Support contingency planning for exercises or real-world events.

3.4.3.6. Support terminal data flow.

3.4.4. Subordinate Level Communications Planners. Lower-level communications planners shall use the MPE to produce terminal image data. Each Party has a different mechanism for distributing this data; appropriate DoD and MOD personnel shall determine the method used for support. The type of terminal may also be a determining factor.

3.4.5. System Access Levels. The AEHF MILSATCOM System shall make available specific Information concerning system utilization. Three levels for access of resource utilization data shall be used: the system level (AEHF SSE/SOC/GSSC), the U.S. Combatant Commander/MOD Planner level, and the Communications Controller (CC)/Fence Controller (FC) level. Each level shall have access to a certain category of data. The AEHF SSE/SOC/GSSC shall have

access to data at the systems level, the MOD Planners/FCs shall have access to their resource utilization data, and the CCs shall have access to network data within allocated Resources under their control.

4.0. Resource Management and Control

4.1. Apportionment Planning. The MOD and DoD shall consider reapportionments at the request of another Party.

4.1.1. Baseline Resources as described in Annex A in the 2002 MOU. MOD users shall have Assured Access to MOD apportioned (fenced) Baseline Resources via the AEHF access control protocols. If at any time Baseline Resources are not in use, the system shall make these Baseline Resources available to other AEHF users. The MOD shall be able to preempt any users operating within the MOD Fence. The MOD Baseline Resources shall not be reduced except as a result of Allocation renegotiations as described in subparagraph 4.1.5. of this Annex.

4.1.2. Unused Resources Outside the MOD Baseline Apportionment. MOD users may access Resources outside the MOD fenced Apportionment, but those Resources are subject to pre-emption in the same manner as described in paragraph 4.1.1 of this Annex. If unused Resources are available, the MOD shall be able to use these Resources until they are reclaimed by the Fence owner or a higher priority user. Arrangements for the modeling and use of unfenced non-baseline Resources shall be defined in the CONSUP and CNIP.

4.1.3. Fenced Non-Baseline Resources. If a Combatant Commander or MOD requires Resources above the agreed upon Apportionment, they may request to formally borrow Resources. During this period, the original owner can reclaim loaned Resources in an emergency. Borrowed Resources shall take the form of a Sub-Fence or a Subsub-Fence. Borrowed Resources shall not affect the Baseline Apportionment, but may be compensated in accordance with national laws of the Parties. Arrangements for the modeling use of fenced non-baseline Resources shall be defined in the CONSUP and CNIP.

4.1.4. Exchanging Resources. The DoD and MOD may decide to exchange AEHF Resources for Resources on other MILSATCOM systems or other Resources. Such exchanges are not within the scope of this MOU but may be accomplished in accordance with national laws.

4.1.5. System Degradation. The MOD shall participate in the Apportionment process (as defined in Annex A to the 2002 MOU) in the event of system degradation.

4.2. Resource Control.

4.2.1. Antenna Pointing and Control. The pointing of antenna beams is accomplished by the antenna controller terminal through use of established AEHF protocols.

4.2.1.1. Controlling MOD Apportioned Antennas. MOD terminals designated as Antenna Controllers shall have the capability via terminal-to-satellite access control protocols to point the MOD antenna beams anywhere within the satellite field of view. Access to the satellite for the purpose of antenna control does not indicate access to any other system resource outside the MOD Fence. Arrangements for the controlling of MOD apportioned antennas shall be defined in the CONSUP and CNIP.

4.2.1.2. Releasing MOD Apportioned Antennas. A MOD-owned antenna beam that has been released can be re-claimed by the MOD at any time.

4.2.1.3. Coverage Via Non-MOD Apportioned Antenna. In crisis or contingency situations, the MOD may request access to a non-MOD allocated beam through the GSSC. The DoD shall make every effort to satisfy the MOD requirement, but DoD makes no guarantee that access to non-MOD apportioned Resources shall be authorized.

4.2.2. Constellation Configuration Changes. The SOM approves the AEHF constellation based on U.S. operational needs.

4.2.2.1. Routine Support. Routine Support is defined as support required to maintain the day-to-day operation of the satellite or constellation. The DoD shall perform Routine Support scheduled support on the satellite constellation. The MOD shall be included in the coordination of all satellite support to ensure the MOD is made aware when the constellation may be unavailable for operations.

4.2.2.2. Non-Routine Support. Non-Routine Support is defined as support required due to an anomaly (e.g., an emergency or threatening situation) that may hamper the health, welfare or communications of the satellite or constellation. Combatant Commands, MOD, Services and users may not be notified until after the anomaly has been rectified. However, the SOM shall make every effort to notify Combatant Commands, MOD, Services and users of the anomaly, status, and consequences as soon as possible.

4.2.3. Satellite Positioning. The DoD, in consultation with the MOD shall make satellite-positioning decisions consistent with U.S. national requirements. The DoD is solely responsible for the management and deployment of the AEHF constellation. In the event a satellite needs to be moved to support U.S. operational needs, the DoD shall coordinate with the MOD to reapportion the MOD baseline Apportionment. The reapportionment shall be conducted in a

manner that best approximates the resource usage outlined in Annex A to the 2002 MOU, paragraph 3.1.

4.3. Life Cycle Support. The DoD shall maintain and upgrade the AEHF MPE throughout the life of the AEHF constellation. The DoD shall purchase, on behalf of the MOD, upgrades to MPE software the DoD develops for these systems. Recommendations made by the MOD for system improvements that are incorporated shall be reviewed to determine cost liability.

4.3.1. The DoD shall make available to the MOD all MPE software upgrades, enhancements, and accompanying technical documentation that are not specifically precluded by U.S. security policies. The MOD shall be provided the opportunity to submit annually a prioritized list of deficiency corrections and enhancements desired to the GSSC for consideration. Final adjudication of priorities shall be at the sole discretion of the DoD based on U.S. operational needs and fiscal constraints.

4.3.2. This MOU provides for MOD-funding of MOD-unique software modifications and accompanying technical documentation. In the event the MOD requires MPE software modifications that are not implemented by AFSPC, provision shall be made for the MOD to fund the modification. Any MOD-funded modifications shall be incorporated into the overall MPE configuration and made available to all AEHF MPE users.

4.3.3. MPE software enhancements shall be installed on IP MPE hardware via the U.S. MPE support infrastructure, whether government depot or Contracting Officer support.

4.4. Coalition Operations. The AEHF MILSATCOM System may be available to support coalition operations. Due to the unique nature of each operation, the DoD and MOD shall discuss and identify the best approach in which AEHF Resources can satisfy coalition operational needs.

5.0. Terminal Operations

5.1. IP Terminals used to communicate through or manage the Resources on the AEHF MILSATCOM System must be operated in accordance with the capabilities and limitations documented in this Annex and all terminal operation procedures, which shall be provided with the terminals. Modifications of AEHF-capable terminals must be coordinated with the appropriate TPO in accordance with the FMS case. Any terminal developed by the MOD must comply with the appropriate AEHF Specifications, Interface Control Documents, and System Security Requirements and must obtain system certification from the DoD before the terminal can be used with the AEHF MILSATCOM System. Modifications of MOD-developed AEHF-capable terminals must be coordinated with the DoD.

5.2. MOD Terminal Operations. Required insularity between MOD and DoD users may be established through the use of separate and different Communications Security (COMSEC) keys and separate uplink, downlink, crosslink, and antenna Resources fenced for MOD use.

5.3. Terminal Upgrades. The DoD, through the PMSUP, shall notify the MOD at least annually, of the status of U.S. terminal procurement efforts including sustainment updates, available enhancements, or future upgrades that have any application to MOD terminals.

6.0. Cryptographic Equipment

6.1. TRANSEC. TRANSEC shall be assured on the AEHF MILSATCOM System through the use of frequency hopped spread spectrum signaling and other pseudo-random signaling techniques. All pseudo-random TRANSEC signaling techniques performed in AEHF terminals shall be under the control of the AEHF Computer Security COMSEC TRANSEC System (ACTS) cryptographic equipment purchased through foreign military sales (FMS). If there is a requirement to build terminals, a separate MOU must be negotiated with the U.S. National Security Agency (NSA). The ACTS cryptographic equipment must be purchased from NSA under an FMS case. Negotiation with NSA is required to satisfy the terms and conditions upon which the TRANSEC devices shall be made available. The NSA terms and conditions are outside the scope of this MOU.

6.1.1. TRANSEC Operational Concept. The MOD shall share one uplink and one downlink TRANSEC hopping key with DoD users and shall use "session" keys (terminal unique and group keys) that shall be under control of the MOD individual user groups. The DoD shall control Resources and resource access on AEHF shall be maintained through cryptologic control of uplink and downlink access control messages through use of individually assigned keys. These security measures and implementation of an enhanced electronic key management procedure allow the DoD to prevent unauthorized access to AEHF Resources.

6.1.2. Key Control and Distribution. NSA shall generate and the DoD shall manage all AEHF MILSATCOM System keys.

6.1.2.1. The DoD shall control and distribute TRANSEC hopping keys and may use Over-the-Air-Rekeying (OTAR) to distribute the keys. Re-keying of all AEHF terminals shall normally be accomplished by the United States via OTAR. For non-OTAR (e.g., ground-based) re-keying of MOD terminals, the DoD shall assume responsibility for providing keys for re-keying of MOD terminals. Session keys shall be provided automatically from the satellite during network setup. Session keys shall provide the necessary segregation of service between user groups. The DoD shall distribute keys to a single location for the MOD. The MOD shall be responsible for further delivery to its users.

6.1.2.2. The MOD shall use the approved AEHF cryptographic key management and distribution architecture as prescribed by the United States for all AEHF MILSATCOM System keys. Terminals shall be operated in accordance with the applicable doctrine.

6.1.3. COMSEC. Communications Security (COMSEC) is an end-to-end, user defined, function on the AEHF MILSATCOM System.

6.1.3.1. The DoD and MOD shall be separately and individually responsible for the operation and support of any and all COMSEC equipment used in satisfaction of their separate national MILSATCOM requirements through the use of the AEHF MILSATCOM System.

6.1.3.2. For DoD and MOD allied interoperable communications over AEHF, COMSEC interoperability shall be achieved through the use of U.S.-developed COMSEC devices and associated key material. The MOD shall be responsible for operation of the COMSEC devices IAW the applicable doctrine provided by the United States.

Appendix 1
Sample Format for Project Equipment

Project Equipment to be loaned shall be listed in a supplement to this Annex in the following format.

Providing Party(s)	Receiving Party(s)	Qty	Description	Part/ Stock #	Consumables/ Non-Consumables	Approx Value	Loan Period

ANNEX B

TO THE

MEMORANDUM OF UNDERSTANDING

BETWEEN THE SECRETARY OF DEFENSE ON BEHALF OF THE DEPARTMENT OF DEFENSE OF THE UNITED STATES OF AMERICA

AND

THE MINISTER OF DEFENCE OF THE KINGDOM OF THE NETHERLANDS

CONCERNING

OPERATIONS AND SUPPORT OF THE

ADVANCED EXTREMELY HIGH FREQUENCY

MILITARY SATELLITE COMMUNICATIONS SYSTEM

RELATING TO THE EXCHANGE OF

COOPERATIVE PROJECT PERSONNEL

1.0. Purpose and Scope

1.1. This Annex to the Memorandum of Understanding between the Department of Defense of the United States of America and the Minister of Defence of the Kingdom of the Netherlands Concerning Operations and Support of Advanced Extremely High Frequency Military Satellite Communications System (MOU) establishes the provisions that shall govern the conduct of Cooperative Project Personnel (CPP). The Parent Party shall assign military members or civilian employees to the Project offices in accordance with Article IV (Management (Organization and Responsibilities)) of this MOU. CPP must be able to perform all the responsibilities assigned to them under this MOU. Commencement of assignments shall be subject to any requirements that may be imposed by the Host Party or its Government regarding acceptance of CPP, such as, but not limited to, visas and visit request documentation. The Host Party and Parent Party shall determine the length of tour for the positions at the time of initial assignment.

1.2. CPP shall be assigned to the facilities of the other Party for Project work and shall report to their designated Host Party supervisor regarding that work. The Host PM shall be responsible for the creation of a document describing the duties of each CPP position, which shall be subject to approval by the Operations and Support (O&S) Steering Committee (OSSC). CPP shall not act as liaison officers on behalf of the Parent Party. CPP may act from time to time on behalf of the Parent Party if the Host Party so authorizes in writing.

1.3. CPP shall not be assigned to command or other positions that would require them to exercise responsibilities that are reserved by law or regulation to an officer or employee of the Host Party's Government.

2.0. Security

2.1. The Host Party shall establish the maximum level of security clearance required, if any, to permit CPP to have access to Classified Information and facilities in which Classified Information is used in accordance with the Project Security Instruction (PSI) and Classification Guide (CG). Access to Classified Information and facilities in which Classified Information is used shall be consistent with, and limited by, Article II (Objectives) and Article III (Scope of Work) of this MOU, and shall be kept to the minimum required to accomplish the work assignments.

2.2. The Parent Party shall file visit requests for the CPP through prescribed channels in compliance with the Host Party's procedures. As part of the visit request procedures, the Parent Party shall cause security assurances to be filed through the Parent Party's Government embassy in the Host Party's country specifying the security clearances for the CPP being assigned.

2.3. The Host Party and Parent Party shall use their best efforts to ensure that CPP are aware of, and comply with, applicable laws and regulations as well as the requirements of Article IX (Controlled Unclassified Information), Article X (Visits to Establishments),

Article XI (Security), and Article XVI (General Provisions) of this MOU and the provisions of the PSI and CG. Prior to commencing assigned duties, CPP shall, if required by the Host Party's Government laws, regulations, policies, or procedures, sign a certification concerning the conditions and responsibilities of CPP.

2.4. CPP shall at all times be required to comply with the security and export control laws, regulations, and procedures of the Host Party's Government. Any violation of security procedures by CPP during their assignment shall be reported to the Parent Party for appropriate action. CPP committing significant violations of security and export control laws, regulations, or procedures during their assignments shall be withdrawn from the Project with a view toward appropriate administrative or disciplinary action by their Parent Party.

2.5. All Classified Information made available to CPP shall be considered as Classified Information furnished to the Parent Party, and shall be subject to all provisions and safeguards provided for in Article XI (Security) of this MOU, the PSI, and the CG.

2.6. CPP shall not have personal custody of Classified Information or Controlled Unclassified Information unless approved by the Host Party and as authorized by the Parent Party. CPP shall be granted access to such Information in accordance with Article IX (Controlled Unclassified Information), Article XI (Security) of this MOU, and the PSI during normal duty hours and when access is necessary to perform Project work.

2.7. CPP shall not serve as a conduit between the Host Party and Parent Party for requests and/or transmission of Classified Information or Controlled Unclassified Information unless specifically authorized by the PSI.

3.0. Technical and Administrative Matters

3.1. Consistent with Host Party laws and regulations, CPP shall be subject to the same restrictions, conditions, and privileges as Host Party personnel of comparable rank and in comparable assignments. Further, CPP and the CPP's authorized accompanying dependents shall be accorded status in accordance with the NATO SOFA.

3.2. On arrival CPP and their dependents shall be provided briefings about applicable laws, orders, regulations, and customs and the need to comply with them. CPP shall also be provided briefings regarding entitlements, privileges, and responsibilities, such as:

3.2.1. Any medical and dental care that may be provided to CPP and their dependants at local medical facilities, subject to the requirements of applicable laws and regulations, including reimbursement when required.

3.2.2. Purchasing and patronage privileges at military commissaries, exchanges, theaters, and clubs for CPP and the CPP's accompanying dependents, subject to the requirements of applicable laws and regulations.

3.2.3. The Host Party shall provide, if available, housing and messing facilities for CPP and the CPP's accompanying dependents on the same basis and priority as for its own personnel. CPP shall pay messing and housing charges to the same extent as Host Party personnel. At locations where facilities are not provided by the Host Party for its own personnel, the Parent Party shall make suitable arrangements for its CPP.

3.2.4. Responsibility of CPP and the CPP's accompanying dependents to obtain motor vehicle liability insurance coverage in accordance with the laws and regulations applicable in the area where they are residing. In case of claims involving the use of private motor vehicles by CPP, the recourse shall be against such insurance.

3.5. The Host Party shall, in consultation with the CPP, establish standard operating procedures for CPP, in the following areas:

3.5.1. Working hours, including holiday schedules.

3.5.2. Leave authorization, consistent to the extent possible with the military and civilian personnel regulations and practices of the Host Party and Parent Party.

3.5.3. Dress regulations, consistent to the extent possible with the military and civilian personnel regulations and practices of the Host Party and Parent Party.

3.5.4. Performance evaluations, recognizing that such evaluations shall be rendered in accordance with the Parent Party's military or civilian personnel regulations and practices.

3.4. CPP committing an offense under the laws of the Government of the Host Party or Parent Party may be withdrawn from this Project with a view toward further administrative or disciplinary action by the Parent Party. Disciplinary action, however, shall not be taken by the Host Party against CPP, nor shall CPP exercise disciplinary powers over the Host Party's personnel. In accordance with Host Party's laws and regulations, the Host Party shall assist the Parent Party in carrying out investigations of offenses involving CPP.

3.5. During their assignment, CPP shall not be placed in the following duty status or environments unless decided by the Parent Party:

3.5.1. Areas of political sensitivity where their presence may jeopardize the interests of either the Host Party or Parent Party, or where, in the normal course of their duty, they may become involved in activities that may embarrass either Party.

3.5.2. Deployments in non-direct hostility situations, such as United Nations peacekeeping or multi-national operations, or third countries.

3.5.3. Duty assignments in which direct hostilities are likely. Should the Host Party organization to which CPP are assigned become involved in hostilities unexpectedly, CPP shall not be involved in the hostilities. Any such CPP approved by the Parent Party for involvement in hostilities shall be given specific guidance as to the conditions under which the assignment shall be carried out by the appropriate authorities of the Host Party and Parent Party.

3.6. The provisions of applicable international agreements regarding the rights of a sending State's military and civilian personnel and their dependents present in the territory of a receiving State shall apply to CPP.

SAMPLE CERTIFICATION OF CONDITIONS AND RESPONSIBILITIES FOR COOPERATIVE PROJECT PERSONNEL

I understand and acknowledge that I have been accepted for assignment to (*insert name and location to which assigned*) pursuant to the Memorandum of Understanding Between the Department of Defense of the United States of America and the Minister of Defence of the Kingdom of the Netherlands Concerning Operations and Support of Advanced Extremely High Frequency Military Satellite Communications System. Capitalized terms in this certification have the meanings defined in the MOU. In connection with this assignment, I further understand, acknowledge, and certify that I shall comply with the following conditions and responsibilities:

1. The purpose of the assignment is to provide my expertise to the program. I shall not seek access to Information (other than Parent Party Information) except as required to perform the duties described in the position description (PD) of the position to which I am assigned, as determined by my designated supervisor. I shall immediately report to my designated supervisor if I have access to Classified, proprietary, or Controlled Unclassified Information that is not required to perform such duties.

2. I shall perform only functions that are properly assigned to me as described in the PD for my assignment and shall not act in any other capacity to the Host Party on behalf of my Government or my Parent Party.

3. All Project Information to which I may have access during this assignment shall be treated as Information provided to my Government in confidence and shall not be further released or disclosed by me, except as authorized by the MOU.

4. When dealing with individuals outside of my immediate office of assignment on official matters, I shall inform such individuals that I am a foreign Cooperative Project Person.

5. I have been briefed on, understand, and shall comply with all applicable regulations concerning the protection of proprietary Information (such as patents, copyrights, know-how and trade secrets), Classified Information, and Controlled Unclassified Information.

6. I shall immediately report to my designated supervisor all attempts to obtain Classified Information, proprietary Information, or Controlled Unclassified Information to which I may have access as a result of this assignment.

_____	_____
(Typed Name)	(Signature)
_____	_____
(Rank/Title)	(Date)